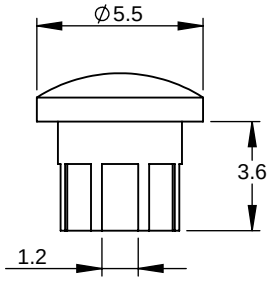

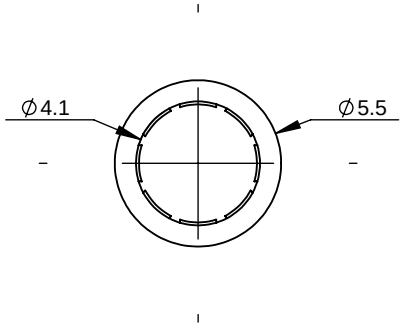

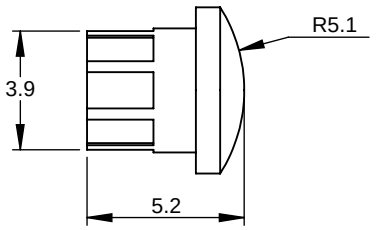

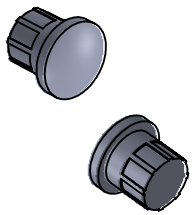

SPECIFICATIONS :

1. Material : PC940A-111.

NOTE : ALL Dimensions are in mm.

PROPRIETARY AND CONFIDENTIAL

THE INFORMATION CONTAINED IN THIS DRAWING IS THE SOLE PROPERTY OF OPTICA. ANY REPRODUCTION IN PART OR AS A WHOLE WITHOUT THE WRITTEN PERMISSION OF OPTICA, IS PROHIBITED

Optica

Optics & Allied engg. pvt ltd.

www.opticsindia.com info@opticsindia.com

ALL DIMENSIONS ARE IN MM UNLESS OTHERWISE SPECIFIED			MODEL / DWG NO. : OPLL10
DRAWN : CHANDAN	APPROVED : KRK		
SCALE : NA	REVISION : R-0	ENGINEERING SUPPORT DWG	TITLE: LIGHT PIPE ∅5.5MM X 5.2MM
DATE : 10-10-2020	PAGE NO: 1 OUT OF 1		